TECHNICAL LIBRARY
03287

LORAIN
Products Corporation

instructions

INSTALLATION
OPERATION
MAINTENANCE

DESIGNERS AND MANUFACTURERS OF

power equipment without moving parts SUB-CYCLE® CONVERTERS AND FLOTROL RECTIFIERS

LORAIN PRODUCTS CORPORATION WARRANTY

Lorain Products Corporation warrants that all equipment manufactured by it shall be free from defects in material and workmanship. The corporation will, at its option, replace or repair free of charge and pay surface carrier charges on any adequately packed equipment covered by its warranty which shall be returned to the factory within 90 days from date of turn-on and found to be defective. All circuit components are warranted for two years from the original shipping date from the factory and which upon examination prove to be defective in material or workmanship. The corporation recommends that all shipments of equipment be inspected by the customer for hidden damage upon receipt from the carrier to insure that a timely claim be filed, if necessary, by the customer. Lorain Products Corporation will not pay claims for shipping damages.

Systems and Equipment Not Economically Returnable To The Factory

In the event that the product involved is a system or equipment which, in the judgment of Lorain Products Corporation, is not economically returnable to the factory or if Lorain Products Corporation has performed the installation, supervised the installation, or performed testing and turn-on, circuit components and Lorain repair labor are covered by this warranty for the first 90 days from date of turn-on and circuit components are warranted for two years from the date of shipment. Upon request, Lorain will send a service technician to the site to determine if the unit is defective in circuit components or workmanship, and will repair the equipment. If the failure is Lorain's fault, no invoice for circuit components or repair labor will be issued if the complaint has been issued within the first 90 days from date of turn-on. If the complaint is issued more than 90 days from the date of turn-on but within two years from the date of shipment, the customer will be billed at the prevailing Customer Service rates but will not be billed for circuit components. If the problem occurs after two years from the date of shipment, circuit components and repair labor are billable.

If the problem has been created by misuse or abuse of the equipment or by malfunction of associated equipment or by environmental conditions, at any time after shipment, the customer will be billed for circuit components and labor.

General Provisions

Lorain Products Corporation shall not be obligated to pay any costs or charges incurred by the customer or by any other party. In no event will Lorain Products Corporation be liable for consequential damages. No waiver, alteration or modification of any of the provisions herein shall be binding on Lorain Products Corporation unless in writing and signed by an authorized official of Lorain Products Corporation. If, during any warranty period, the subject equipment has, in the opinion of Lorain Products Corporation, been modified or misrepaired, the warranty will be void unless the modifications or repairs have been made after consultation with the corporation and upon the recommendation of the corporation.

1. SPECIFICATION

1.1 GENERAL: This DC to DC Converter changes 48 volts (positive ground) to 48 volts DC for either positive or negative grounded systems.

1.2 OUTPUT RATINGS

1.2.1 Voltage: Negative or positive 48 volts DC nominal. Adjustable over the range of 45.6 to 50.4 volts.

1.2.2 Regulation

(A) **Static:** Steady state output voltage remains within ±1% of the adjusted voltage for any load current from no load to full load for the input voltage range of 42 to 56 volts DC.

(B) **Dynamic:** For a step load change of 50% of full load within the range of 10% to 100% of full rated current, the maximum voltage transient will not exceed 5% of the initial steady state voltage.

1.2.3 Filtering

(A) **Voice Band:** Noise is less than 26 dBrn C message.

(B) **Wide Band:** Does not exceed 480 millivolts peak to peak over the frequency range of 10 Hz to 50 million Hz.

1.2.4 Current: 16 amperes

1.3 INPUT RATINGS

1.3.1 Voltage: 48 volts DC (positive ground) — Will operate over a range of 42 to 56 volts DC. This converter will tolerate a range of 40 to 60 volts DC without operating a fuse or creating component damage.

1.3.2 Filtering: Noise reflected back to a 100 ampere hour battery is less than 26 dBrn.

1.3.3 Typical Input Currents

(A) **No Load:** 0.51 amperes at 48 volts DC.

(B) **Full Load:** 19.4 amperes at 48 volts DC.

(C) Does not exceed 24 amperes at maximum overload and the input voltage within the range of 42 to 56 volts DC.

1.4 STANDARD FEATURES

1.4.1 Input Protection

(A) **Undervoltage:** Low battery voltage sensing circuit causes output voltage and current to be reduced to zero when the input voltage goes below 37 volts. Output current is automatically restored up to maximum overload when input voltage goes above 42 volts.

1.4.2 Output Protection

(A) **Short Circuit:** One 20 ampere Bussmann Type BAF fuse.

(B) **Current Limiting:** Circuit limits DC output current to 110% of full rated load. Adjustable from 100% to 110% of full load.

(C) **Overvoltage:** Voltage trip circuit breaker and high voltage sensing circuit disconnects the input voltage when the output voltage exceeds 50.4 volts.

1. SPECIFICATION

1.4.4 **Meters**

(A) 0-75 volt, 2-1/2 inch rectangular type DC voltmeter, ±2% accuracy at full scale, MODUTEC (or equivalent), 2.41 inch scale length.

(B) 0-25 ampere, 2-1/2 inch rectangular type DC ammeter, ±2% accuracy, MODUTEC (or equivalent), 2.41 inch scale length.

1.4.5 **Series Output Diode:** Output diode may be connected in either negative or positive lead which enables paralleling with other converters. Load may not be shared proportionately between paralleled units. Failure in one converter will not affect the others.

1.4.6 **Alarms**

(A) If the output voltage exceeds a preset limit, circuits cause two alarm circuits to close, ground to be made available for two alarm circuits, a CONVERTER FAILURE lamp to light and the converter to be turned off.

(B) If the input or output voltages goes below a preset limit or the converter is manually turned off, circuits cause two alarm circuits to close, ground to be made available for two alarm circuits and a CONVERTER FAILURE lamp to light.

1.4.7 **Mounting:** Universal angle provided for either 19 inch (1-3/4 inch multiple drilling) or 23 inch (1 inch or 1-3/4 inch multiple drilling) relay rack mounting.

1.5 ENVIRONMENTAL RATINGS

1.5.1 **Operating Ambient Temperature Range:** 0°C to +50°C (+32°F to +122°F)

1.5.2 **Storage Temperature Range:** -20°C to +65°C (-4°F to +149°F)

1.5.3 **Heat Dissipation:** 566 BTU/HR (48 volt input at 50 volt output and full load)

1.5.4 **Ventilation Requirements**

(A) **Ventilation:** This converter should be mounted so that bottom and top ventilating openings are not blocked and air entering the bottom of the cabinet does not exceed +50°C (+122°F)

(B) **Spacing:** It may be necessary to allow a minimum of 1-3/4" spacing between this converter and other heat producing equipment.

(C) **Stacking:** A maximum of six converters may be stacked, one above the other, 1-3/4" minimum spacing. Additional converters may be stacked providing a baffle plate or increased spacing is used.

1.6 ACCESSORIES: Available for use with this DC to DC Converter — None

1.7 MISCELLANEOUS

1.7.1 **Schematic Diagram:** SD5653-028

1.7.2 **Wiring Diagram:** T5653-028

1.7.3 **Instructions:** Section 3441

2. DIMENSIONS

NOTES

1. ALL DIMENSIONS ARE IN INCHES UNLESS OTHERWISE SPECIFIED.
2. WEIGHT
   (A) SHIPPING: 32 LBS
   (B) NET 27 LBS
3. FINISH: EQUIPMENT LIGHT GRAY.
4. INDICATES VENTILATING GRILLE

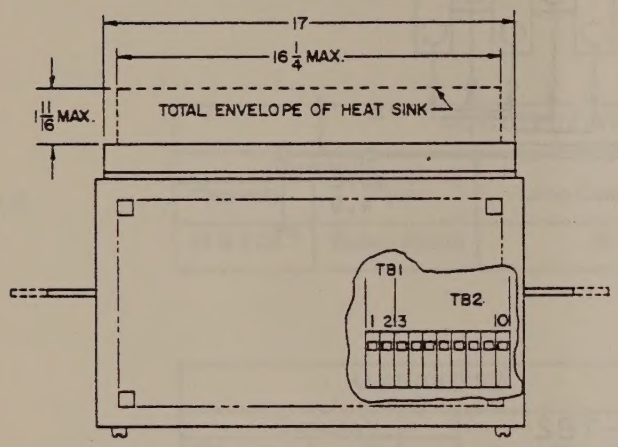

FIG. 3
TOP VIEW

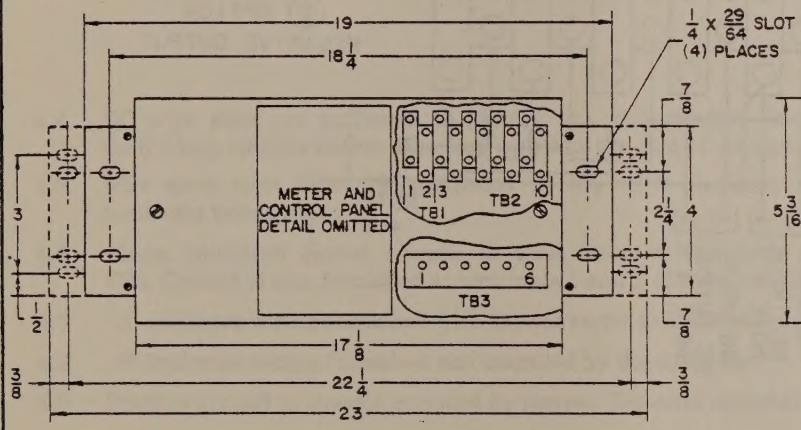

FIG. 1
FRONT VIEW

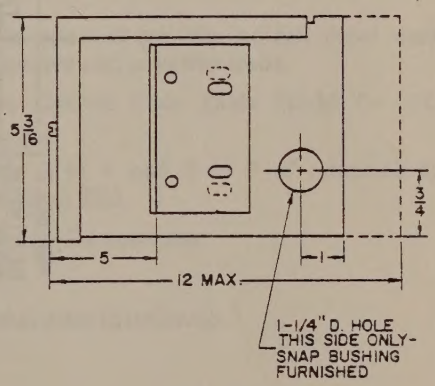

FIG. 2
SIDE VIEW

3. INSTALLATION CONNECTIONS

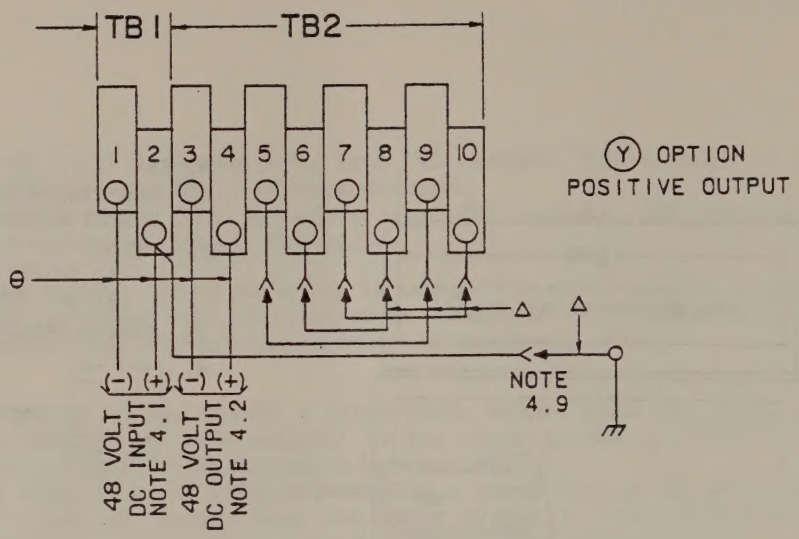

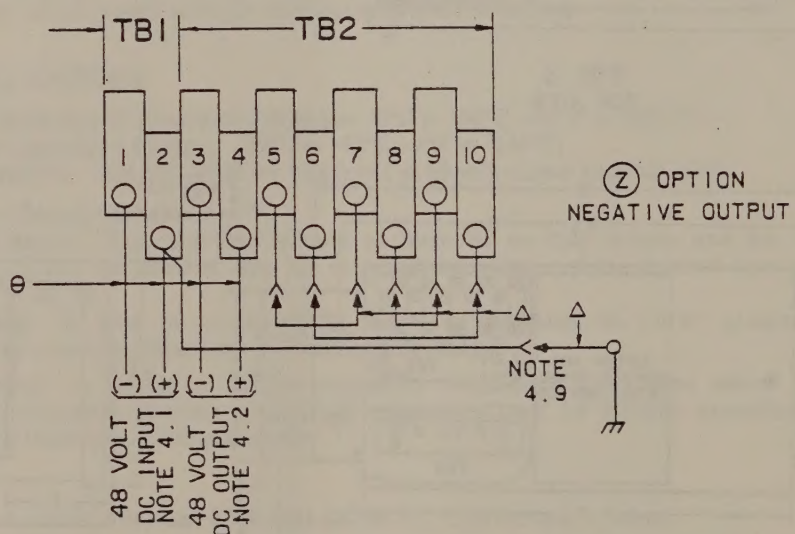

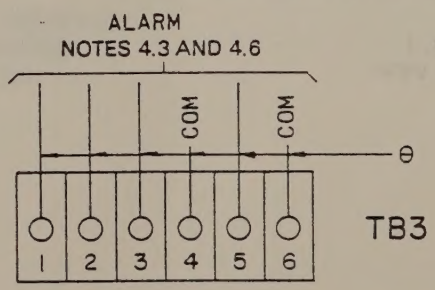

4. INSTALLATION NOTES

4.1

DC INPUT (TB1)				
Terminals		Loop Length-Ft	Recm Wire Size	Recm Fusing
Capacity	Type			
22 to 8 Ga.	Saddle Clamp	50	8 Ga.	30 amperes

4.2

DC OUTPUT (TB2)			
Terminals		Loop Length-Ft	Recm Wire Size
Capacity	Type		
22 to 8 Ga.	Saddle Clamp	90	8 Ga.

4.3

ALARMS (TB3)		
Terminals		Recm Wire Size
Capacity	Type	
16 Ga. Max.	6-32 Screw	18 Ga.

4.4 DC wire sizes are sufficient to restrict the voltage drop to one volt or less at full rated current for the loop lengths shown. The loop length is the sum of the positive and negative leads.

4.5 Wire sizes meet those recommended in the 1975 National Electric Code Table 310-16 for +75°C conductor temperature.

4.6 Alarm condition causes circuits to close between terminals 3 to 4 and 5 to 6 of terminal block TB3. Ground is also furnished at terminals 1 and 2 of terminal block TB3.

4.7 △ indicates wiring furnished with the converter to be installed by the customer.

4.8 ⊖ indicates wiring furnished and installed by the customer.

4.9 Positive ground to chassis provided by jumper. Removal optional after installation.

"HSB" SERIES
DC TO DC CONVERTERS

CONTENTS PAGE

1. MODEL DATA 1

General 1

2. TEST APPARATUS 1

3. DESCRIPTION 2

General 2
Accessory 2

4. INSTALLATION 2

Location 2
Mounting 2
Electrical Connections ... 2

5. ADJUSTMENTS 2

General 2
Output Voltage Adjustment . 2
Current Limit Adjustment .. 3
High Voltage Shutdown Adjustment 3
Low Voltage Alarm Adjustment 3
Gain Adjustment 5
Low Battery Shutdown Adjustment 5
Instantaneous Current Limit 5

6. OPERATION 5

General 5
Starting and Stopping 5
Metering 5
Local Alarms 5
Remote Alarms 5
Fuses 5
Component Boards 6

7. CIRCUIT DESCRIPTION

General 6
Input Filter 6
Power Amplifier 6
Output Circuit 7
Driver Circuit 7
Voltage/Current Regulator Circuits 8
High Voltage Shutdown/ Low Voltage Alarm 8

1. MODEL DATA

General

1.01 Refer to the appropriate Power Data Sheet for information concerning the input and output ratings, operating limits, dimensions, recommended input and output lead sizes, fusing, and terminal lug capacity for the following D-c to D-c Converters:

Model	Spec. No.
HSB3H	5664-022
HSB6H	5664-023
HSB8B	5653-027
HSB16A	5635-007
HSB16B	5653-028
HSB16B	5653-030
HSB30A	5645-002
HSB8A	5625-003

2. TEST APPARATUS

Test Load, LORAIN Model Y4, Spec. No. 5883-107, or equivalent

3. DESCRIPTION

General

3.01 This DC to DC Converter operates from nominal 48 volts DC to provide filtered and regulated DC to the load. This Converter is a compact unit designed with a high frequency switching circuit to maintain audible noise levels to an absolute minimum.

3.02 This Converter is equipped with a high voltage shutdown/low voltage alarm circuit. In the event of a high output voltage condition, the Converter will shutdown; while a low output voltage condition will cause an alarm to be extended.

3.03 A low battery sensing circuit causes output voltage and current to be reduced to zero when the input voltage goes below 37 volts. Output current capability is restored up to maximum rated load when input voltage goes above 42 volts.

3.04 This Converter is also equipped with a current limiting circuit which will prevent further increase of output current above a predetermined (adjustable) level.

Accessories

3.05 An accessory for Model HSB16A, Spec. No. 5635-007 only, is available for changing the output voltage adjustable range from 22.8 - 25.2 to 25.17 - 27.83. This option is designated "X" on Drawing SD5635-007.

3.06 An accessory for Model HSB30A, Spec. No. 5645-002 only, is available for changing the output voltage adjustable range from 22.8 - 25.2 to 20.0 ≟ 24.0 volts. This option is designated "X" on Drawing SD-5645-002.

4. INSTALLATION

Location

4.01 This DC to DC Converter will operate best in a well ventilated area which has an ambient temperature range of 0°C (32°F) to 50°C (122°F).

CAUTION: In mounted position, ventilation openings at the top and bottom of the converter cabinet must be unobstructed. This is essential for proper cooling during operation. The temperature of air entering the cabinet must not exceed 50°C (122°F). Refer to Power Data Sheet for spacing and baffle plate requirements.

Mounting

4.02 This Converter is designed for mounting in 19 or 23 inch relay racks.

Electrical Connections

4.03 Installer's input, output, and alarm connection terminals are accessible by removing the front cover of the unit. The terminal blocks are located at the front right side of the unit. Installer connections are shown on the Power Data Sheet.

5. ADJUSTMENT

General

5.01 All adjustment potentiometers are located on the plug-in circuit cards at the front left side of the unit. To gain access to the plug-in circuit cards, it is necessary to remove the front cover of the converter.

Output Voltage Adjustment

5.02 The output voltage adjustment potentiometer OUTPUT VOLTAGE (R3), located on circuit card VR-A3, sets the output voltage level of the DC to DC Converter. Unless otherwise specified on the order, the output voltage has been factory adjusted to the output voltage given in Table A. Should readjustment become necessary, follow the procedure below.

a) Adjust the output voltage to the desired level by means of potentiometer OUTPUT VOLTAGE (R3). The output voltage can be monitored using output voltmeter M1.

b) To increase output voltage, turn screwdriver adjustment shaft of potentiometer R3 clockwise; to decrease output voltage, turn adjustment shaft counterclockwise.

High Voltage Shutdown Adjustment

5.04 The high voltage shutdown adjustment potentiometer HIGH VOLTAGE SHUTDOWN (R2), located on circuit card HVS/LVA, sets the value of output voltage at which the Converter will shutdown. Unless otherwise specified on the order, the high voltage shutdown limit has been factory adjusted to the voltage given in Table A. Should readjustment become necessary, follow the procedure below.

a) It may be necessary to disconnect the load from the Converter output to perform this adjustment.

b) Turn screwdriver adjustment shaft of potentiometer HIGH VOLTAGE SHUTDOWN (R2) fully clockwise.

c) Increase the output voltage of the Converter to the desired shutdown value, by turning screwdriver adjustment shaft of potentiometer OUTPUT VOLTAGE (R3), located on circuit card VR-A3, clockwise.

d) Turn screwdriver adjustment shaft of potentiometer R2 clockwise until input circuit breaker CB1 opens.

e) Return potentiometer OUTPUT VOLTAGE (R3) to its original setting and close input circuit breaker CB1.

Low Voltage Alarm Adjustment

5.05 The low voltage alarm adjustment potentiometer LOW VOLTAGE ALARM (R1), located on circuit card HVS/LVA-A4, sets the value of output voltage at which lamp CONVERTER FAILURE will illuminate and extend an external alarm, if connected. Unless otherwise specified on the order, the low voltage alarm limit has been factory adjusted to the value given in Table A. Should readjustment become necessary, follow the procedure below.

Model & Spec.	Output Voltage, Volts	Current Limit, %	High Voltage Shutdown, Volts	Low Voltage Alarm, Volts
HSB3H 5664-022	130	110	136-137	123-124
HSB6H 5664-023	130	110	136-137	123-124
HSB8B 5653-027	48	110	51.8-52.6	45.4-46.2
HSB16A 5635-007	24	110	25-25.4	22.6-23
HSB16A 5635-007 e/w "X" Option	26.5	110	26.6-28.0	25-25.4
HSB16B 5653-028 5653-030	48	110	51.8-52.6	45.4-46.2
HSB30A 5645-002	24	110	25-25.4	22.6-23
HSB8A 5625-003	24	110	25-25.4	22.6-23
HSB30A 5645-002 e/w "X" Option	22	110	22.9-23.3	20.7-21.1

TABLE A
FACTORY SETTINGS

a) Turn screwdriver adjustment shaft of potentiometer LOW VOLTAGE ALARM (R1) fully counterclockwise.

b) Decrease the output voltage of the Converter to the desired alarm value by turning screw driver adjustment shaft of potentiometer OUTPUT VOLTAGE (R3), located on circuit card VR-A3, counterclockwise.

c) Turn screwdriver adjustment shaft of potentiometer R1 clockwise, slowly, until lamp CONVERTER FAILURE illuminates.

d) Return potentiometer OUTPUT VOLTAGE (R3) to its original setting.

Gain Adjustment

5.06 The gain adjustment potentiometer GAIN ADJ (R3), located on circuit card DRV-A1, sets the Converter regulation control loop gain. This potentiometer has been factory set as required and field adjustment is not recommended.

Low Battery Shutdown Adjustment

5.07 The Low Battery Shutdown Adjustment potentiometer (R28), located on circuit card DRV-A1, sets the value of input voltage at which the Converter will shutdown. This limit has been factory set at 37 volts DC and field adjustment is not recommended.

Current Limit Adjustment

5.08 The current limit adjustment potentiometer (R30), located on circuit card DRV-A1, sets the value at which the output current limit circuit will prevent further increase of output current. This limit has been factory set at 110% of rated output current and field adjustment is not recommended.

6. OPERATION

General

6.01 This DC to DC Converter operates from nominal 48 volts DC to provide filtered and regulated DC to the load. An output wiring option allows the user to select either positive or negative output. Since the Converter operates without moving parts, it requires no periodic maintenance or adjustment.

Starting and Stopping

6.02 To start or stop Converter operation, place circuit breaker CB1 in the ON or OFF position, respectively. The circuit breaker is located on the front panel directly below the meters.

Metering

6.03 This DC to DC Converter is equipped with an output voltmeter (M1) and ammeter (M2) which continuously indicate output voltage and current, respectively.

Local Alarms

6.04 CONVERTER FAILURE: Lamp CONVERTER FAILURE (LED1) will illuminate during a high voltage shutdown, low voltage alarm, low battery shutdown or converter output failure.

Remote Alarms

6.05 High Voltage Shutdown and Low Battery Shutdown: Terminals 3 to 4 and 5 to 6 provide closed circuits; while positive battery is provided at terminals 1 and 2 of terminal block TB3 during a high voltage shutdown condition. Circuit breaker CB1 must be reset manually by placing it in the ON position to resume operation. For a description of the low battery sensing circuit (shown on the schematic diagram as "low battery shutdown"), refer to Para. 3.03.

6.06 Low Voltage Alarm: Terminals 3 to 4 and 5 to 6 provide closed circuits; while positive battery is provided at terminals 1 and 2 of terminal block TB3 during a low voltage alarm condition.

Fuses

6.07 The following table lists the function, size, and type of each fuse used in this DC to DC Converter. If replacement becomes necessary, use only the size and type listed, or equivalent.

Function	Size (Amps)	Type
F1 DC OUTPUT	20 (HSB16A, HSB16B)	Bussmann BAF
	40 (HSB30A)	Bussmann ABU
	10 (HSB8A, HSB8B, HSB6H)	Bussmann BAF
	5 (HSB3H)	Bussmann BAF

Component Boards

6.08 Any of the following component boards can easily be replaced as individual assemblies in the event of a failure of some component on a component board.

Component Boards

DRV-A1 (4338-365)	Driver Circuit
*PA-A2 (4337-325)	Power Amplifier Assy
**PA-A2 (4337-039)	Power Amplifier Assy
VR-A3 (4865-646)	Voltage Regulator Circuit
HVS/LVA-A4 (4863-760)	High Voltage Shut-down/Low Voltage Alarm Circuits

*In Models HSB16A (5635-007), HSB8B (5653-027), HSB8A (5625-003), and HSB3H (5664-022) only.

**In Models HSB16B (5653-028 and 5653-030), HSB30A (5645-002), and HSB6H (5664-023) only.

7. CIRCUIT DESCRIPTION

General

7.01 The appropriate schematic diagram shows the electrical and functional circuits of these "HSB" Series DC to DC Converters.

Input Filter

7.02 Choke L1, diodes CR1 and CR2, and capacitors C1-C6 and C14 (or C16) form an input filter which will suppress any transient input voltages to the Converter.

Power Amplifier PA-A2 (4337-325)

7.03 A portion of the d-c input is applied to the power amplifier assembly where the d-c voltage is controlled by transistors Q1 and Q2, and is then applied to transformer T1.

7.04 Transistors Q1 and Q2 operate in a switching mode amplifying a quasi square wave signal generated by the driver circuit card DRV-A1, described later. This amplified square wave is then applied to power transformer T1 primary. Resistors R1-R3, R16, capacitors C1-C3, and diodes CR1 and CR2 suppress voltage spikes across the collectors of transistors Q1 and Q2.

Power Amplifier PA-A2 (4337-039)

7.05 A portion of the d-c input is applied to the power amplifier assembly where the d-c voltage is controlled by transistors Q1-Q4, and is then applied to transformer T1.

7.06 Transistors Q1-Q4 operate in a switching mode amplifying a quasi square wave signal generated by the

driver circuit card DRV-A1, described later. This amplified square wave is then applied to the power transformer T1 primary. Resistors R1-R3, R16, capacitors C1-C3, and diodes CR1 and CR2 suppress voltage spikes across the collectors of transistors Q1-Q4.

Output Circuit

7.07 The applied square wave of transformer T1 primary is induced on the power secondary windings of T1, which are connected to a rectifying network. This rectified DC voltage is then applied to the output terminals of the Converter.

7.08 The positive output is applied through inductor L2 while the negative output is applied through ammeter M2. If positive output is required, series diode CR3 and output fuse F1 will be in the positive line; likewise, if negative output is required, series diode CR3 and output fuse F1 will be in the negative line.

7.09 Series diode CR3 isolates the DC to DC Converter from any parallel connected Converters, thus preventing disturbance of bus voltage by a failed parallel connected Converter. Shunt diode CR6 (in some models) prevents complete loss of bus voltage in boost mode operation due to a failed Converter.

Driver Circuit DRV-A1 (4338-365)

7.10 The driver circuit produces the quasi square wave which is applied alternately to the power transistors located in the power amplifier circuit described above.

7.11 Clock A1 generates a 40 KHz pulse which is applied to voltage/pulse width Converter A1 generating a ramp. The slope of the ramp is determined by the current through resistor R12. This current is proportional to the input battery voltage. The width of the pulse generated by the VPW Converter A1 is determined by the slope of the ramp, by transistor Q6, and by the conduction of photo-coupler Q1. Photo-coupler Q1 is controlled by the regulator circuit. Transistor Q6 is controlled by the instantaneous collector current in the power amplifier circuit. Flip-flop A2 generates a 20 KHz square wave from the pulse produced by clock A1. The clock pulse, VPW converter output, and the square wave are combined in NAND gate A3 to form two out-of-phase variable quasi square waves. The two quasi square waves and their complement are buffered by A4. The quasi-square waves are amplified by transistors Q2-Q5 which operate in a constant current mode while their complement is amplified by transistors Q7 and Q8 which operates as a clamp on transformer T1 primary. Diodes CR12-CR14 provide bias for the amplifier transistors and provide voltage for circuits A1-A4 operation. Windings 1, 2 and 3, 4 of transformer T1 provide base drive voltage; while winding 9, 10 of transformer T1 provides power to operate the regulator and alarm circuits.

7.12 Battery voltage is applied to a voltage divider consisting of resistor R26 and potentiometer R28. When the divider voltage increases sufficiently to overcome the voltage across zener diode CR17, transistor Q10 will conduct. Transistor Q10, conducting, will bias transistor Q9 off, thus allowing capacitor C13 to charge. When capacitor C13 becomes fully charged, the VPW Converter A1 will begin to deliver maximum pulse width, which will result in full output power of the Converter.

7.13 The output current of the Converter is detected by a current transformer, located in the power amplifier circuit, and converted to a voltage which is applied to diodes CR20-CR23. This rectified voltage is then applied across capacitor C6. When the charge across capacitor C6 exceeds the reference voltage of zener diode CR1 on mini-board (4337-040) which is located on the driver circuit card, transistor Q6 will begin to conduct. The conduction of transistor Q6 will reduce the conduction angle through diode CR18 and lower the clock frequency through diodes CR19 and resistor R19.

Voltage Regulator Circuit VR-A3 (4865-646)

7.14 The voltage regulator circuit monitors the output voltage of the Converter. The output of the voltage regulator provides the controlled oscillator with the error signal which will control the output voltage.

7.15 Comparator A1G3 compares the signal developed across resistor R2 and potentiometer R3, which is proportional to the output voltage, to a reference voltage developed across zener diode CR3. The output of comparator A1G3 is applied through diode CR1 to drive a photo-coupler on the driver circuit card. Regulator A1G2 functions as a series regulator for the isolated supply voltage developed across capacitor C5 and supplies voltage to zener diode CR3 and the photo-coupler on DVR-A1. Diodes CR4-CR11 comprise alternate rectifiers for the 20 KHz power from the driver circuit and the output circuit.

High Voltage Shutdown/Low Voltage Alarm HVS/LVA-A4 (4863-760)

7.16 The HVS/LVA-A4 circuit card monitors the d-c output voltage of the Converter. The circuit card contains two circuits; one that will cause the Converter to shutdown due to a high output voltage and one that will cause an alarm to be extended due to a low output voltage.

7.17 D-c output voltage is applied across resistor R4 and potentiometer R2 which is adjusted for a high voltage shutdown level. When the output voltage increases, the reference voltage developed across zener diode CR3 will remain stable, thus this difference between the voltage across potentiometer R2 and zener diode CR3 will be detected by comparator A1G1. Comparator A1G1 will swing positive causing light sensitive transistor Q1 to stop conducting, biasing transistor Q2 off and Q3 on. Conduction of transistor Q3 will cause ground to be applied to the trip coil of circuit breaker CB1, thus causing the Converter to shutdown.

7.18 D-c output voltage is applied across resistor R4 and potentiometer R1 which is adjusted for a low voltage alarm level. When the output voltage decreases, the reference voltage developed across zener diode CR3 will

remain stable, thus this difference between the voltage across potentiometer R1 and zener diode CR3 will be detected by comparator A1G2. Comparator A1G2 will swing negative causing light sensitive transistor Q4 to stop conducting, biasing transistors Q5 and Q6 off. Non-conduction of transistor Q6 will cause relay K1 to de-energize. Contacts of relay K1, de-energized, will provide two closed circuits and supply ground at two for activation of external alarms, if connected.

LORAIN PRODUCTS
A RELIANCE ELECTRIC COMPANY

1122 F STREET LORAIN, OHIO 44052 216/288-1122
TWX 810-426-2130 (LORAIN PROD)
TLX 98-0505 (LORN PROD LORN)

ALSO WITH MANUFACTURING FACILITIES IN . . . . . .

CANADA

LORAIN PRODUCTS LTD.
122 EDWARD STREET
ST THOMAS, ONTARIO
TEL 519-631-0780
TWX 610-358-6703 (LORAINPRODCAN)

MEXICO

PRODUCTOS LORAIN de MEXICO S A de C V
APARTADO POSTAL 77001
MEXICO 10, D F, MEXICO
TEL 576-82-77
TLX 01774308 (1774308 LORME)

ELECTRICAL PARTS LIST
LORAIN MODEL HSB16B DC TO DC CONVERTER
SPEC. NO. 5653-028

This Electrical Parts List is arranged alphabetically by part name. Spare parts are not usually required if adequate standby equipment is available and if the LORAIN EQUIPMENT is installed at an accessible location so that parts can readily be obtained from Lorain Products stock. When ordering parts, please furnish equipment Model No., Spec. No., and Serial No. as given on the equipment nameplate. The quantity of spare parts listed should be sufficient for ten or less assemblies or models for at least 18 months. If a single asterisk (*) appears in the Quantity Recm. Spares column, it indicates the part, assembly, or model is listed more than once, in which case, use the quantity where the item first appears. If two asterisks (**) appear, refer to the sub-list for that assembly or model. If a dash (-) appears, this indicates that spares are not recommended for this part or assembly.

Ref. Desig.	LPC Part No.	Description	Quantity Recm. Spares
ASSEMBLIES			
A1	4338-281	Driver PW Board	1
A2	4337-039	Power Amplifier PW Board	1
A3	4865-611	Voltage/Current Regulator PW Board	1
A4	4863-760	High Volt Shutdown/Low Volt Alarm PW	1
LED1	4257-022	LED Circuit Board	
CAPACITORS			
C1	2731-106	10UF 100 Volt, Electrolytic	-
C2	2713-173	1UF 100 Volt DC	1
C3	2731-318	6600UF 75 Volt, Electrolytic	-
C4	2724-140	0.01UF 1000 Volt DC	1
C5	2724-140	0.01UF 1000 Volt DC	*
C6	2724-106	0.1UF 500 Volt DC	1
C7	2724-146	680PF 1000 Volt DC	1
C8	2724-140	0.01UF 1000 Volt DC	1
C9	2724-106	0.1UF 500 Volt DC	*
C10	2731-318	6600UF 75 Volt, Electrolytic	-
C11	2724-106	680PF 1000 Volt DC	*
C12	2737-128	2.2UF 75 Volt, Electrolytic	-
C13	2724-106	0.1UF 500 Volt DC	*
C14	2724-106	0.1UF 500 Volt DC	*

ELECTRICAL PARTS LIST
LORAIN MODEL HSB16B DC TO DC CONVERTER
SPEC. NO. 5653-028

Ref. Desig.	LPC Part No.	Description	Quantity Recm. Spares
CIRCUIT BREAKERS			
CB1	2566-114	25 Amp 32 Volt DC	1
DIODES			
CR1	2812-223	1N5059, Silicon	2
CR2	2812-223	1N5059, Silicon	*
CR3	2813-531	30 Amp 200 Volt	1
FUSES			
F1	2483-438	20 Amp, Cartridge	3
INDUCTORS			
L1	4412-047	DC Filter	-
L2	4413-006	DC Filter	-
METERS			
M1	2943-425	0-75 Voltmeter, DC	-
M2	2923-447	0-25 Ammeter, DC	-
RECTIFIERS			
A5	2822-055	30 Amp 400 Volt DC	1
RESISTORS			
R1	2635-682	16.2K Ohm 1 Watt, Fixed	1
R2	2615-335	1M Ohm 1/2 Watt, Fixed	1
R3	2635-721	121K Ohm 1 Watt, Fixed	1
R4	2652-471	390 Ohm 11 Watt, Fixed	1
R5	2651-473	10 Ohm 6.5 Watt, Fixed	1
R6	2615-476	5.6K Ohm 1 Watt, Fixed	1
R7	2615-359	10M Ohm 1/2 Watt, Fixed	1
R8	2635-517	22.1 Ohm 1 Watt, Fixed	1
R11	2652-471	390 Ohm, 11 Watt, Fixed	*

ELECTRICAL PARTS LIST
LORAIN MODEL HSB16B DC TO DC CONVERTER
SPEC. NO. 5653-028

Ref. Desig.	LPC Part No.	Description	Quantity Recm. Spares
TRANSFORMERS			
T1	4518-217	Power	-
T2	4422-527	Current	-
MISCELLANEOUS			
	2488-141	Fuseholder	1

LORAIN PRODUCTS CORPORATION
Lorain, Ohio, U.S.A.

LORAIN PRODUCTS (CANADA) LTD.
St. Thomas, Ontario, Canada

Printed in U.S.A.

rrs

CIRCUIT NOTES:

101. FUSES SHOWN IN THIS TABLE ARE NOT PART OF EQUIPMENT

DESIG	FUSE AMP	POTENTIAL	ONE PER

BATTERY AND POWER SUPPLIES SYMBOLS

VOLTAGE RANGE

40-60

102. UNLESS OTHERWISE SPECIFIED THE FOLLOWING OPTION IS PROVIDED. Y

OPTION	REFERENCES	
	WIRING	CONNECT TB2 JUMPERS
POS OUTPUT	Y	5 TO 9, 6 TO 8, 7 TO 10
NEG OUTPUT	Z	5 TO 7, 6 TO 10, 8 TO 9

103. OPTIONAL FRAME GROUND FOR PROTECTION AGAINST REVERSE BATTERY POLARITY MAY BE REMOVED AFTER INSTALLATION.

EQUIPMENT NOTES.

201 REFER TO PD-5653-028 FOR EXTERNAL CONNECTIONS, FUSING AND WIRE SIZE.

INFORMATION NOTES:

301 UNLESS OTHERWISE SPECIFIED, RESISTANCE VALUES ARE IN OHMS, CAPACITANCE VALUES ARE MICROFARADS, AND VALUES PRECEDED BY THE SYMBOL + (PLUS), OR — (MINUS) ARE IN VOLTS.

302 CODES WITHIN PARENTHESES, AS (4863-760) REPRESENT LPC PART NUMBERS.

303. SEE WIRING DIAGRAM, T-5653-028 FOR LPC PART NUMBERS OF COMPONENTS.

304. HIGHEST REF DESIG USED ON THIS DRAWING:

RES	XMFR	DIODES	ASSYS	FUSES	CAP
R11	T2	CR3	A5	F1	C14
NOT USED					
R7,9,10					

REVISIONS

			NEW
2	1835633	9 23 75	POLARITY OPTION REVISED.
3	1835779	12 3 75	T2 AND R8 ADDED
4	1835984	4 15 76	A2 WAS 4337-640, P2 AND J2 ADDED
5	1836092	5 17 76	R11 ADDED
(— NEGATIVE TERM ADDED TO A5			
ISS. 6		1836438	JR 5-10-77
7	183-7001	4-20-79	S.M.G. REMOVED R7; A1 WAS 4338-281; A3 WAS 4865-611; REMOVED WIRE P FROM M2 & A3.

181-1150

FUNCTIONAL SCHEMATIC
FOR
DC-DC CONVERTER
MODEL HSB16B

LORAIN PRODUCTS CORPORATION
LORAIN, OHIO
LORAIN PRODUCTS (CANADA) LTD., ST. THOMAS, ONTARIO

DWG SIZE D

DESIGN N KAMMILLER	ISS. 7
DRAWN BY J. Baer	DATE 6-9-75
CHECKED BY J. Hanger	DATE 6-11-75
CHECKED BY N. KAMMILLER	DATE 8-26-75
APPROVED BY	DATE 9-8-75
RATING	

SD-5653-028

SHEET 1 OF 2

PRINTED IN U.S.A.

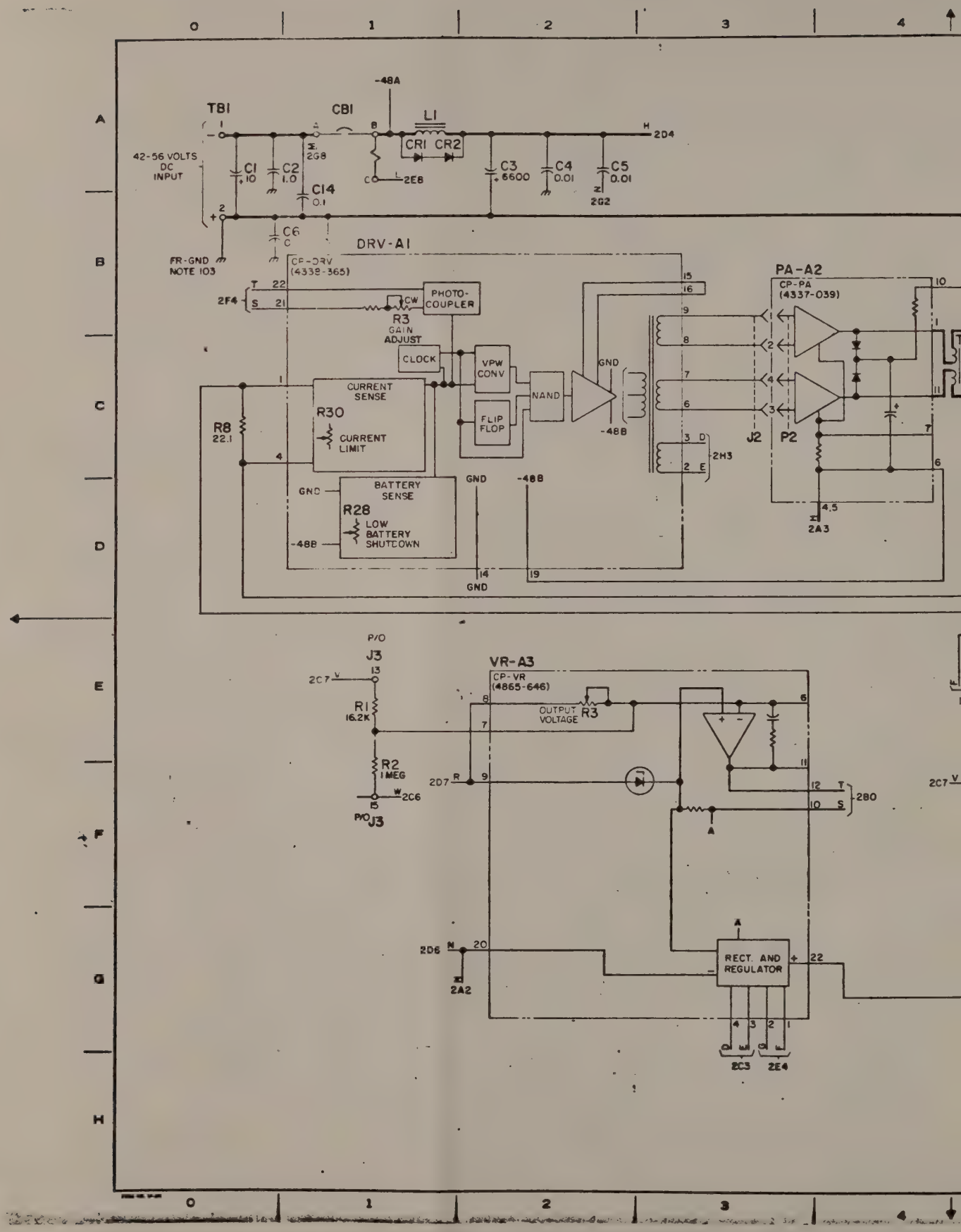
TB1
CB1
-48A
L1
CR1 CR2
2D4
42-56 VOLTS DC INPUT
C1 10
C2 1.0
C14 0.1
2G8
2E8
C3 6600
C4 0.01
C5 0.01
2G2
C6
FR-GND NOTE 103
DRV-A1
CP-DRV (4338-365)
2F4
PHOTO-COUPLER
R3 GAIN ADJUST
CLOCK
VPW CONV
FLIP FLOP
NAND
CURRENT SENSE
R30
CURRENT LIMIT
R8 22.1
BATTERY SENSE
R28
LOW BATTERY SHUTDOWN
GND
-48B
PA-A2
CP-PA (4337-039)
J2
P2
2H3
2A3
P/O J3
2C7
R1 16.2K
R2 1 MEG
2C6
VR-A3
CP-VR (4865-646)
OUTPUT VOLTAGE
2D7
2D6
2A2
RECT. AND REGULATOR
2C3
2E4
2B0

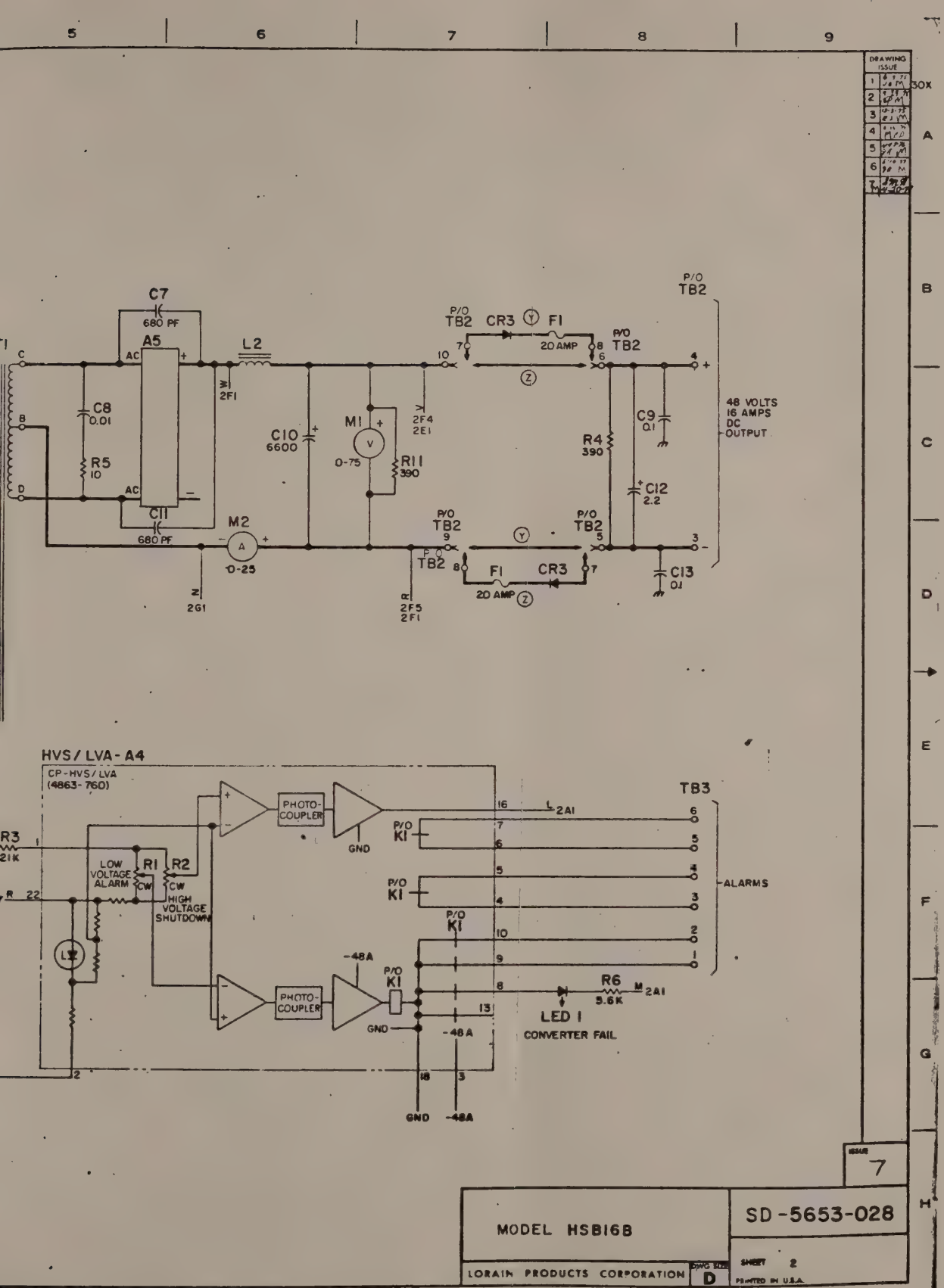

DRAWING ISSUE	
1	
2	
3	
4	
5	
6	
7	

30X

ISSUE 7

MODEL HSB16B

SD-5653-028

LORAIN PRODUCTS CORPORATION

DWG SIZE D

SHEET 2

PRINTED IN U.S.A.

CPS-PA
(POWER AMPLIFIER)

COMPONENT LIST

CAPACITORS

DESIG	CODE
(2) C1,C3	(2724-181) 0.022 UF, 1000V DC
C2	(2731-607) 20 UF, 150V DC, ELECT.

DIODES

DESIG	CODE
(2) CR1,CR2	(2812-220)

RESISTORS

DESIG	CODE
(2) R1,R3	(2651-466) 6.2 OHM, 6 1/2 W, 5%
R2	(2652-488) 1K, 1/2W, 5%
R16	(2651-105) 1.5 OHM, 3 W, 5%

TRANSISTORS

DESIG	CODE
(4) Q1,2,3,4	(2842-170)

INPUT/OUTPUT INFORMATION

CIRCUIT DESCRIPTION

Q1 - Q4 OPERATE IN THE SWITCHING MODE AMPLIFYING A QUASI SQUARE WAVE SIGNAL APPEARING AT 2-3, 8-9. R1-R3,C1-C3,CR1,CR2 LIMIT VOLTAGE PEAKS ON Q1-Q4 COLLECTORS.

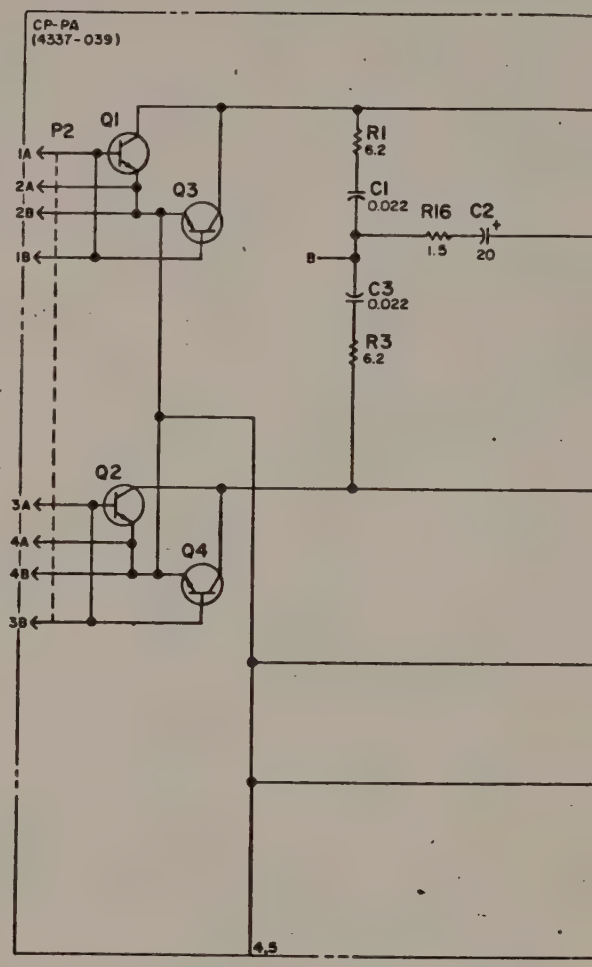

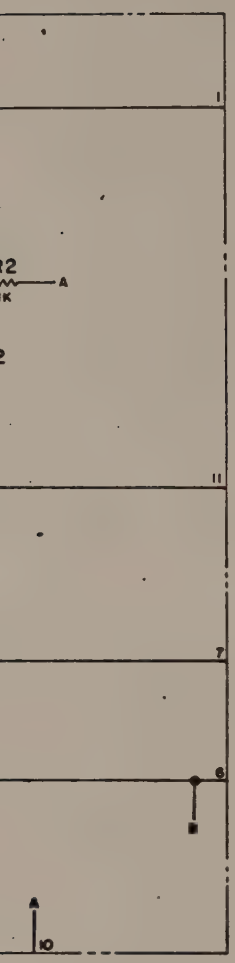

MANUFACTURING REFERENCES

CATEGORY	NUMBER
ASSEMBLY DRAWING	4337-039
CONNECTOR ON FRAME	

SYMBOL

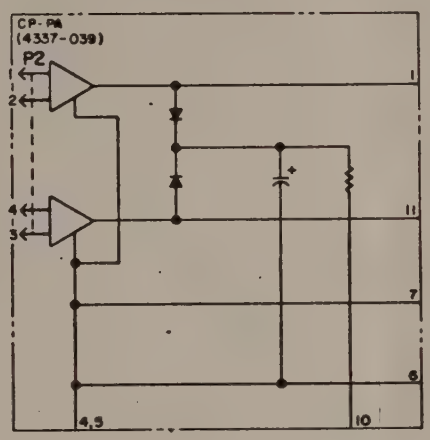

NOTES:

1. UNLESS OTHERWISE SPECIFIED, RESISTANCE VALUES ARE IN OHMS AND CAPACITANCE VALUES ARE IN MICROFARADS; VALUES PRECEDED BY THE SYMBOL + (PLUS), OR - (MINUS), ARE IN VOLTS.
2. CODES WITHIN PARENTHESES, AS (2724-181), REPRESENT LPC PART NUMBERS.

REVISIONS

1n	NEW		

181-1152

POWER AMPLIFIER ASSEMBLY

LORAIN PRODUCTS CORPORATION
LORAIN, OHIO
LORAIN PRODUCTS (CANADA) LTD., ST. THOMAS, ONTARIO

DWG SIZE D

DESIGN N KAMMILLER		NO. 1
DRAWN BY	DATE	3-8-76
CHECKED BY	DATE	3-8-76
CHECKED BY G Sodoma	DATE	4-15-76
APPROVED BY	DATE	4-21-76
RATING STANDARD		

SD-4337-039

SHEET 1 OF 1

PRINTED IN U.S.A.

COMPONENT LIST

CAPACITORS

DESIG	CODE
(2) C1,4	(2724-148) 3300PF, 1000V DC
C2	(2731-129) 50UF, 25V DC, ELECT.
C3	(2724-146) 680PF, 1000V DC
(2) C5,12	(2713-118) 0.01UF, 100V DC
C6	(2737-103) 0.1UF,35V DC, TANTALUM
(2) C7,8	(2713-205) 0.0022UF, 200V DC
(2) C9,10	(2724-106) 0.1UF, 500V DC
C11	(2731-115) 30UF, 60V DC, ELECT.
(2) C13,15	(2737-141) 47UF, 20V DC, TANTALUM
C14	(2724-140) 0.01UF, CERAMIC

DIODE

DESIG	CODE
(11) CR1,2,3,4,5,6,7,8, 15,18,19	(2811-101)
(6) CR9,10,20,21,22,23	(2812-220)
(3) CR12,13,14	(2835-510)
CR16	(2812-201)
CR17	(2835-411)
CR24	(2834-524)

INTEGRATED CIRCUITS

DESIG	CODE
A1	(2871-004) DUAL TIMER
A2	(2876-101) DUAL FLIP-FLOP
A3	(2876-302) TRIPLE NAND
A4	(2876-401) QUAD BUFFER
A5	(4337-040) CURRENT LIMIT ASSY

RESISTORS

DESIG	CODE
R1	(2662-408) 5.1 OHM, 2W, 5%
R2	(2615-257) 560 OHM, 1/2W
R3	(2675-117) 5K, 1/2W
R4	(2651-305) 3 OHM, 3W
R5	(2635-678) 12.7K, 1W, 1%
(4) R6,11,18,27	(2615-255) 470 OHM, 1/2W
(2) R7,17	(2651-339) 1.5K, 3W, 5%
(3) R8,16,22	(2615-271) 2.2K, 1/2W
(2) R9,14	(2615-291) 15K, 1/2W
(2) R10,13	(2615-263) 1K, 1/2W
R12	(2635-717) 100K, 1W, 1%
R15	(2635-636) 1.58K, 1W, 1%
R19	(2634-623) 3.32K, 1/4W, 1%
R20	(2651-550) 1.5K, 6-1/2W, 5%
R21	(2634-632) 4.75K, 1/4W, 1%
R23	(2615-205) 2.7 OHM, 1/2W
R24	(2615-303) 47K, 1/2W
R25	(2615-295) 22K, 1/2W
R26	(2635 647) 2.94K, 1W, 1%
R28	(2675-113) 1K, 1/2W
R29	(2634-648) 10K, 1/4W, 1%
R30	(2675-114) 2K, 1/2W
R31	(2634-567) 221 OHM, 1/4W, 1%
R32	(2634-682) 51.1K, 1/4W, 1%

TRANSFORMERS

DESIG	CODE
T1	(4481-015)

TRANSISTORS

DESIG	CODE
Q1	(2857-101) PHOTO COUPLER
(2) Q2,5	(2844-010) PNP
(5) Q3,4,6,7,8	(2841-155) NPN
(2) Q9,10	(2841-100) NPN

SYMBOL

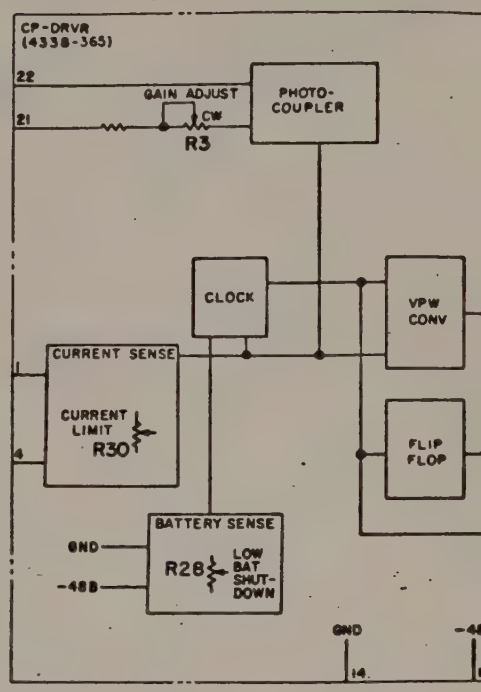

CIRCUIT DESCRIPTION

A1 CLOCK GENERATES 40 KHZ PULSE WHICH STARTS RAMP GENERATED IN A1 VOLTAGE/PULSE WIDTH CONVERTER. RAMP SLOPE OF VPW CONV. IS DETERMINED BY CURRENT THRU R12 PROPORTIONAL TO BATTERY VOLTAGE. PULSE WIDTH OUT OF VPW CONV. IS DETERMINED BY RAMP SLOPE AND CONDUCTION OF Q1, WHICH IS CONTROLLED BY REGULATOR CKT AND Q6, WHICH IS CONTROLLED BY INSTANTANEOUS COLLECTOR CURRENT IN POWER AMPLIFIER. A2 FLIP FLOP GENERATES 20 KHZ SQUARE WAVE FROM CLOCK PULSE. CLOCK PULSE, VPW CONV. OUTPUT AND SQUARE WAVE ARE COMBINED IN A3 NAND GATE TO FORM TWO OUT OF PHASE WIDTH VARIABLE QUASI SQUARE WAVES AND THEIR COMPLEMENT WHICH ARE BUFFERED BY A4. THE QUASI SQUARE WAVES ARE AMPLIFIED BY Q2, Q3, Q4, Q5 OPERATING IN THE CONSTANT CURRENT MODE. THE COMPLEMENT IS AMPLIFIED BY Q7, Q8 OPERATING AS A CLAMP ON T1 TRANSFORMER PRIMARY. CR12-CR14 DEVELOP BIAS FOR AMPLIFIER TRANSISTORS AND SUPPLY VOLTAGE FOR A1-A4 CIRCUITS. WINDINGS 1,2 AND 3,4 PRODUCE BASE DRIVE VOLTAGE. WINDING 9,10 DEVELOPES POWER TO OPERATE REGULATOR AND ALARM CIRCUITS.

R26,R28 FORM A VOLTAGE
WITH REFERENCE CR17 TO
UNTIL BATTERY IS SUFFIC
ALLOWING VPW CONV. TO I
CURRENT TRANSFORMER LOC
C6 VOLTAGE EXCEEDS REFE
CR18 AND CLOCK FREQUENC

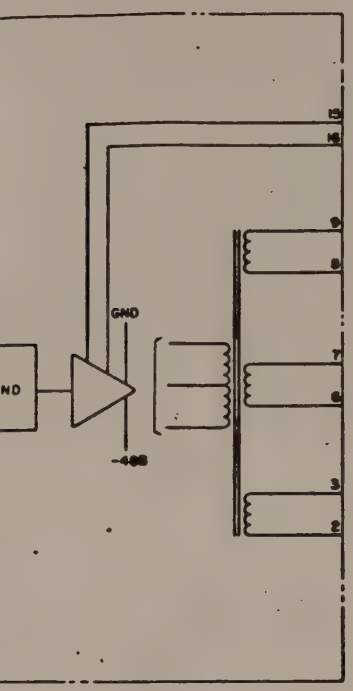

MANUFACTURING REFERENCES

CATEGORY	NUMBER
ASSEMBLY DRAWING	4338-365
P.W BOARD	3157-193
CONNECTOR ON FRAME	2475-772

NOTES:

1. UNLESS OTHERWISE SPECIFIED, RESISTANCE VALUES ARE IN OHMS AND CAPACITANCE VALUES ARE IN MICROFARADS; VALUES PRECEDED BY THE SYMBOL + (PLUS), OR — (MINUS), ARE IN VOLTS.
2. CODES WITHIN PARENTHESES, AS (2662-408) REPRESENT LPC PART NUMBERS.

REVISIONS

1	M	NEW.	REF. 4338-281

BY MAR 23 1979

ACROSS BATTERY THE OUTPUT OF WHICH IS COMPARED
C10 AND Q9. Q9 MAINTAINS C13 AT A LOW VOLTAGE
IGH TO ALLOW STARTING AT WHICH TIME C13 CHARGES.
PULSE WIDTH. CR20-CR23 RECTIFY OUTPUT OF EXTERNAL
POWER AMPLIFIER CIRCUIT AND PEAK CHARGE C6. WHEN
-A5, Q6 CONDUCTS REDUCING CONDUCTION ANGLE THRU
CR19 AND R19.

1837001	DESIGN G. SCHMITZ — SH. 1
DRIVER	DRAWN BY J.J.J. — DATE 3-13-79
	CHECKED BY — DATE
	CHECKED BY G. Schmitz — DATE 3-13-79
	APPROVED BY — DATE 3/23/79
	RATING STANDARD
	SD-4338-365
LORAIN PRODUCTS CORPORATION LORAIN, OHIO	DWG SIZE D
	SHEET 1 OF 2

PRINTED IN U.S.A.

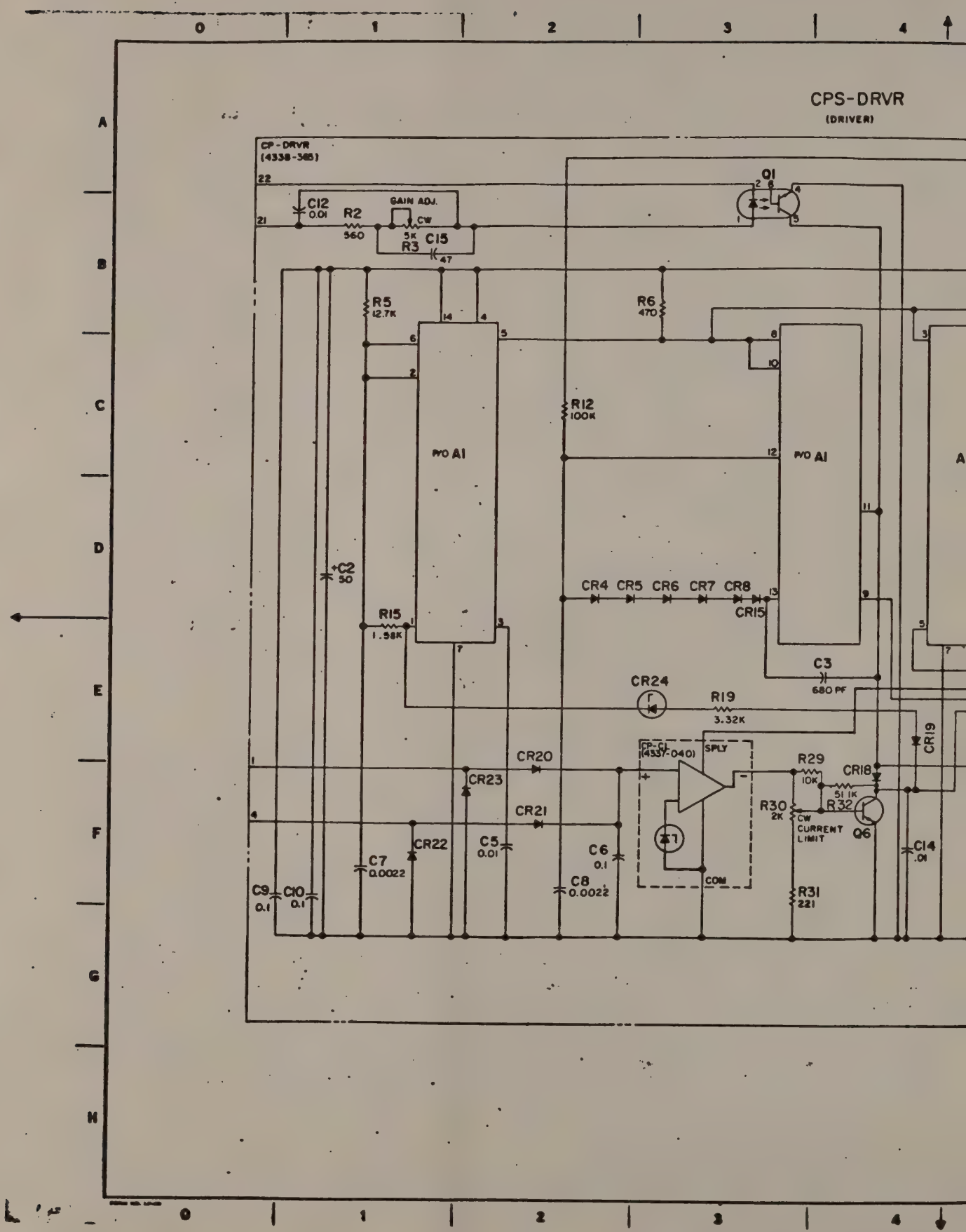
CPS-DRVR
(DRIVER)
CP-DRVR
(4338-365)
GAIN ADJ.
CW
C12
0.01
R2
560
5K
R3
C15
47
Q1
R5
12.7K
R6
470
R12
100K
P/O A1
P/O A1
A
+C2
50
R15
1.58K
CR4 CR5 CR6 CR7 CR8
CR15
C3
680 PF
CR24
R19
3.32K
CR19
CP-C1
(4337-040)
SPLY
COM
CR20
CR23
CR21
CR22
C5
0.01
C6
0.1
C7
0.0022
C8
0.0022
C9
0.1
C10
0.1
R29
10K
CR18
51 1K
R30
2K
R32
CW
CURRENT
LIMIT
Q6
R31
221
C14
.01

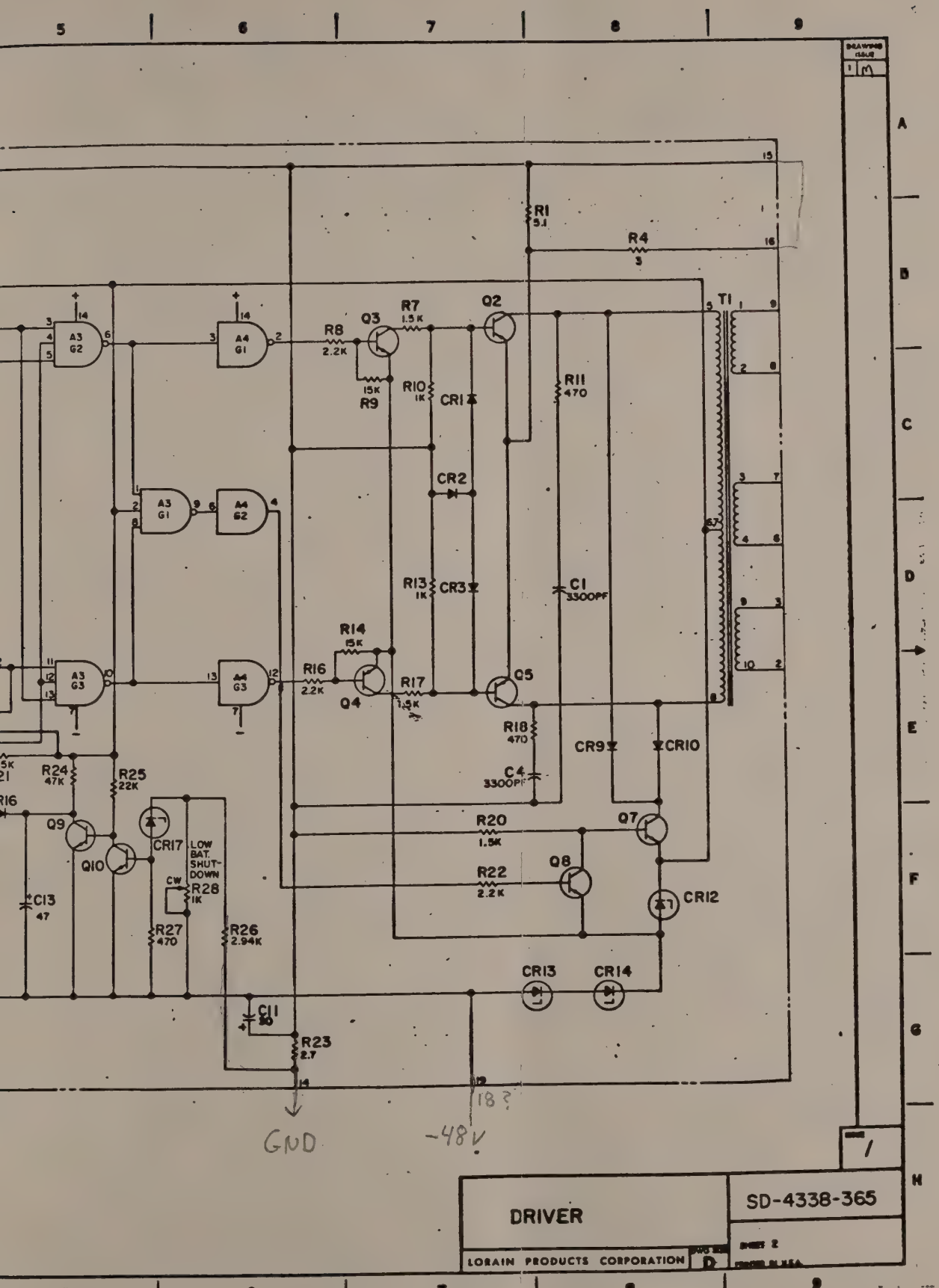

DRIVER

SD-4338-365

LORAIN PRODUCTS CORPORATION

SIZE D

SHEET 2

COMPONENT LIST

CAPACITORS

DESIG	CODE
C1	(2724-106) 0.1UF, 500V DC
C2	(2713-132) 0.1UF, 100V DC
C3	(2724-140) 0.01UF, 1000V DC
C4	(2731-105) 10UF, 50V DC, ELECT
C8	(2731-225) 1100UF, 40V DC, ELECT
C9	(2724-125) 220PF, 500V DC

DIODES

DESIG	CODE
(5) CR1,4,5,6,7	(2811-101)
CR3	(2835-325) 6.2V, 0.4W, ZENER
(4) CR8,9,10,11	(2812-220)

INTEGRATED CIRCUITS

DESIG	CODE
A1	(2871-115)

RESISTORS

DESIG	CODE
R2	(2635-637) 1820 OHM 1W 1%
R3	(2675-113) 1K, 1/2W, POT
R4	(2615-279) 4.7K, 1/2W
R5	(2615-327) 470K, 1/2W
(3) R6,7,9	(2615-287) 10K, 1/2W
R8	(2635-624) 1K, 1W, 1%
R10	(2635-673) 10K, 1W, 1%
R18	(2615-239) 100 OHM 1/2W

CPS-VR

(VOLTAGE REGULATOR)

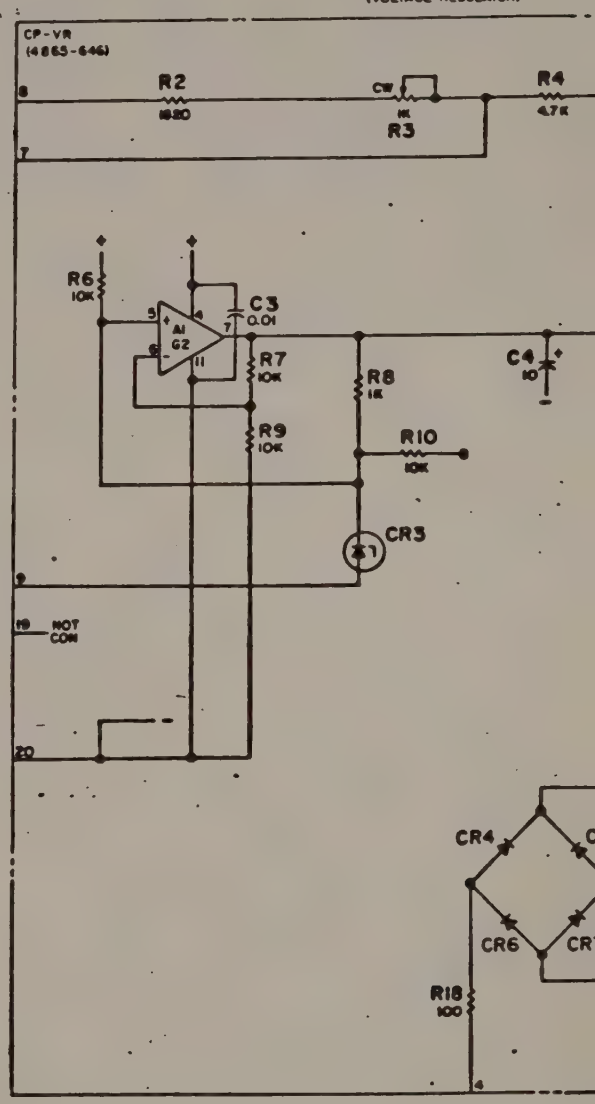

CIRCUIT DESCRIPTION

A1G1 COMPARES SIGNAL DEVELOPED ACROSS R2, R3 PROPORTIONAL TO OUTPUT VOLTAGE WITH REFERENCE DEVELOPED ACROSS CR3. COMPARATOR OUTPUT CONNECTED BY DIODE CR1. DIODE OUTPUT DRIVES OFF BOARD PHOTO ISOLATOR. A1G3 FUNCTIONS AS A SERIES REGULATOR FOR ISOLATED SUPPLY VOLTAGE DEVELOPED ACROSS C5 AND SUPPLIES PHOTO ISOLATOR AND CR3 REFERENCE. CR4-CR11 COMPRISES ALTERNATE RECTIFIERS FOR 20K HZ POWER FROM DRIVER AND OUTPUT CIRCUITS.

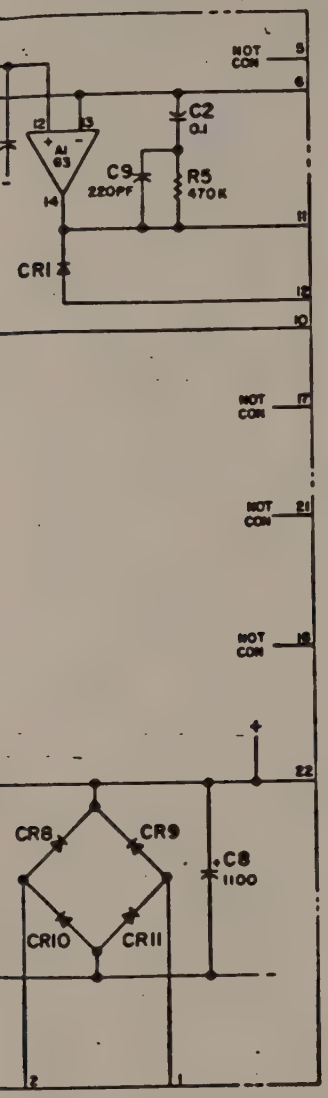

MANUFACTURING REFERENCES

CATEGORY	NUMBER
ASSEMBLY DRAWING	4865-646
P.W. BOARD	3168-510
CONNECTOR ON FRAME	2473-776

SYMBOL

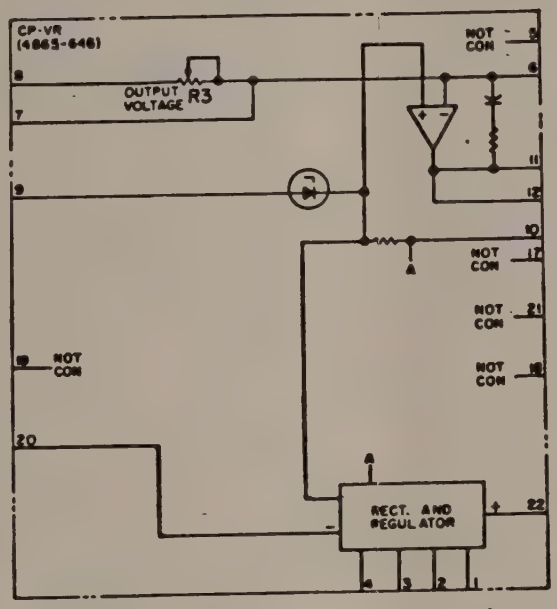

NOTES:

1. UNLESS OTHERWISE SPECIFIED, RESISTANCE VALUES ARE IN OHMS, AND CAPACITANCE VALUES ARE IN MICROFARADS; VALUES PRECEDED BY THE SYMBOL + (PLUS), OR - (MINUS), ARE IN VOLTS.
2. CODES WITHIN PARENTHESES, AS (2713-142), REPRESENT LPC PART NUMBERS.

REVISIONS

1 NEW REF 4865-6U

1837001

VOLTAGE REGULATOR

DESIGN G SCHMITZ

DRAWN BY JJJ DATE 3-12-79

CHECKED BY DATE

CHECKED BY G. Schmitz DATE 3-13-79

APPROVED BY DATE 3/22/79

SD-4865-646

LOGAIN PRODUCTS CORPORATION
LOGAIN, OHIO

DWG SIZE D

SHEET 1 OF 1

CPS-HVS/LVA

(HIGH VOLTAGE SHUTDOWN - LOW VOLTAGE AL

COMPONENT LIST

CAPACITOR

DESIG	CODE
C1	(2713-132) 0.1UF, 100 VDC
C2	(2731-103) 10 UF, 100 VDC, ELECT.
C3	(2724-140) 0.01UF, 1000 VDC

DIODES

DESIG	CODE
(2) CR1,2	(2812-223)
CR3	(2835-325) 6.2V, 400MW, ZENER

INTEGRATED CIRCUITS

DESIG	CODE
A1	(2871-115) QUAD OP-AMP

RELAYS

DESIG	CODE
K1	(2543-443) 1940 OHM, 62V, COIL

RESISTORS

DESIG	CODE
(2) R1,2	(2675-117) 5K, 1/2W, POT.
(2) R3,7	(2615-279) 4.7K, 1/2W
R4	(2635-665) 6810 OHM, 1 W, 1%
(2) R5,12	(2615-287) 10K, 1/2W
R6	(2615-487) 10K, 1W
(2) R8,9	(2635-673) 10K, 1W, 1%
R10	(2615-267) 1.5K, 1/2W.
(3) R11,13,15	(2615-295) 22K, 1/2W
R14	(2615-311) 100K, 1/2W

TRANSISTORS

DESIG	CODE
(2) Q1,4	(2857-101) PHOTO-COUPLER
Q2	(2843-151) PNP
Q3	(2843-041) PNP
(2) Q5,6	(2841-102) NPN

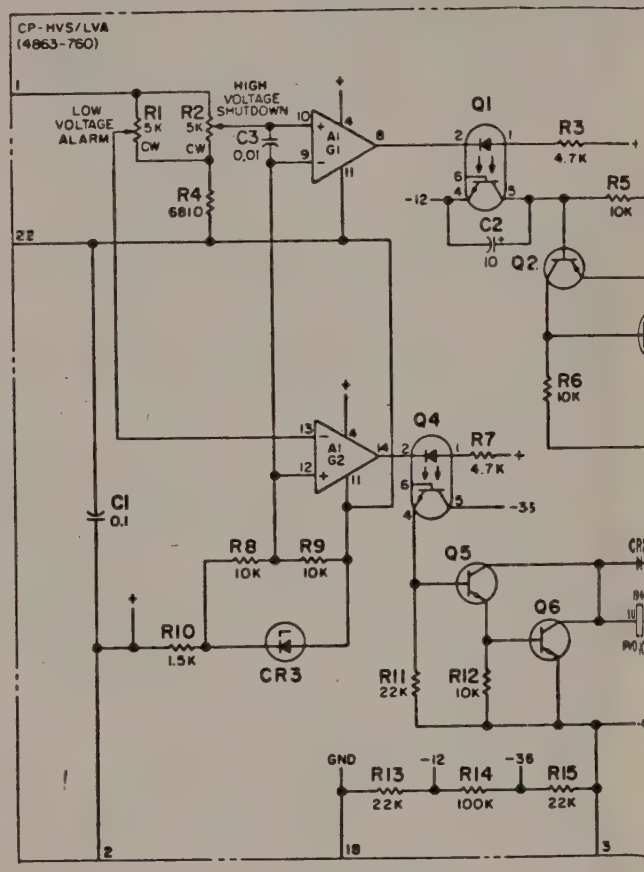

INPUT/OUTPUT INFORMATION

CIRCUIT DESCRIPTION

A PORTION OF OUTPUT VOLTAGE IS DEVELOPED ACROSS R1, R2, R4 IT IS COMPARED WITH REFERENCE DEVELOPED ACROSS CR3 AT A1,G1 AND G2. A1,G1 OUTPUT IS ISOLATED BY Q1 AND AMPLIFIED BY Q2,Q3 TO ENERGIZE COIL OF VOLTAGE TRIP INPUT CIRCUIT BREAKER ON OVERVOLTAGE CONDITION A1,G2 OUTPUT IS ISOLATED BY Q4 AND AMPLIFIED BY Q5,Q6 TO ENERGIZE K1 LOW VOLTAGE ALARM RELAY.

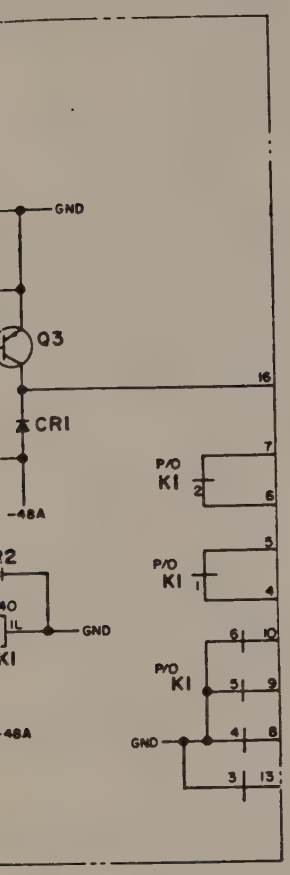

MANUFACTURING REFERENCES

CATEGORY	NUMBER
ASSEMBLY DRAWING	4863-760
CONNECTOR ON FRAME	2475-772

SYMBOL

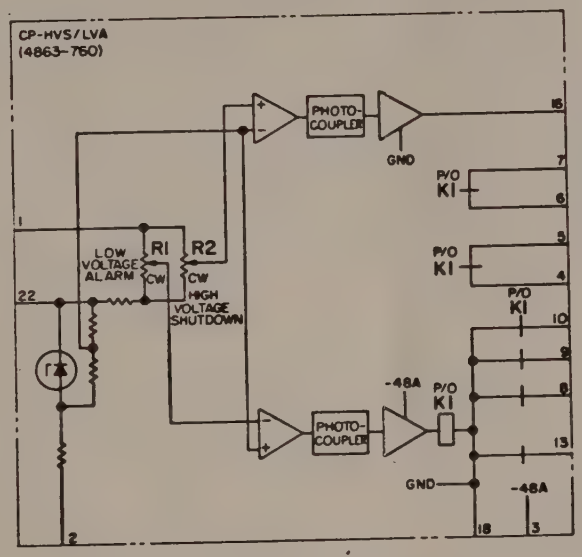

NOTES:

1. UNLESS OTHERWISE SPECIFIED, RESISTANCE VALUES ARE IN OHMS AND CAPACITANCE VALUES ARE IN MICROFARADS: VALUES PRECEDED BY THE SYMBOL + (PLUS), OR — (MINUS), ARE IN VOLTS.
2. CODES WITHIN PARENTHESES, AS (2713-132), REPRESENT LPC PART NUMBERS.

REVISIONS

1			NEW
2	835633	9	CONTACT SET ADDED.
		23	
		75	
3	835779	12	"A" DESIGNATION
		2	ADDED TO BATTERY
		75	SYMBOL
4	835984	3	C3 ADDED.
		15	CONNECTOR WAS
		76	2475-776

181-1152

HIGH VOLTAGE SHUTDOWN-
LOW VOLTAGE ALARM

DESIGN N KAMMILLER — REV. 4

DRAWN BY — DATE 4-21-75
CHECKED BY — DATE 4-21-75
CHECKED BY — DATE 4-26-75
APPROVED BY — DATE 4-8-75
RATING

SD-4863-760

LORAIN PRODUCTS CORPORATION
LORAIN, OHIO
LORAIN PRODUCTS (CANADA) LTD., ST. THOMAS, ONTARIO

DWG SIZE D

SHEET 1 OF 1

PRINTED IN U.S.A.

SD-DRAWING ISSUES AND T-DRAWING ISSUES AS FOLLOWS:									
SD-DRAWING ISSUES									
1	2	3	4	5	5	5	6	7	
T-DRAWING ISSUES									
1	2	3	4	5	6	7	8	9	

FIG. 1
METER PANEL
(WIRED FROM REAR SIDE)

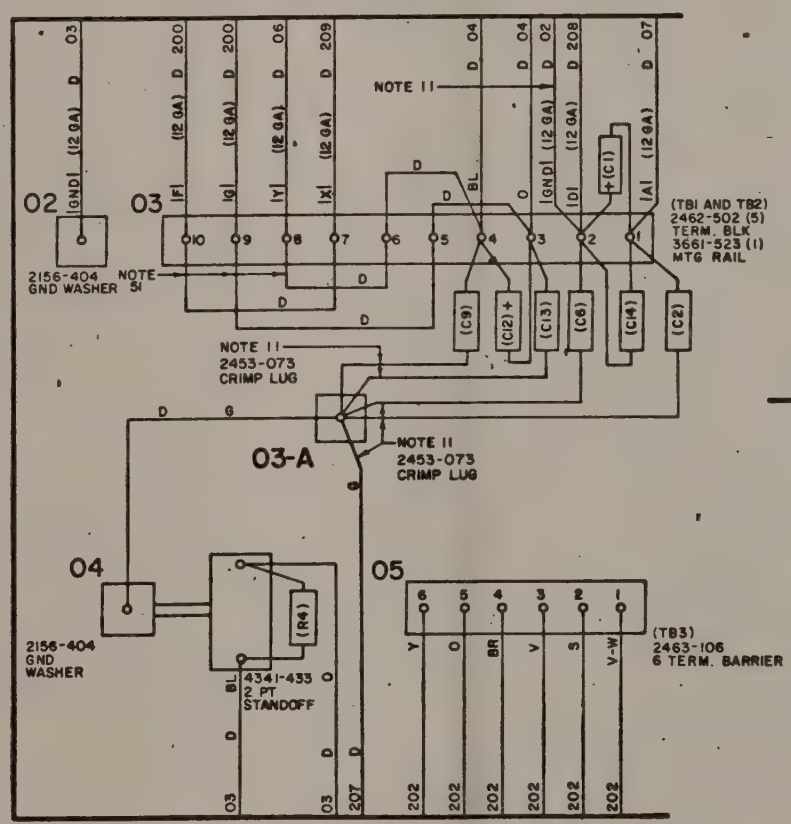

FIG. 2
METER PANEL

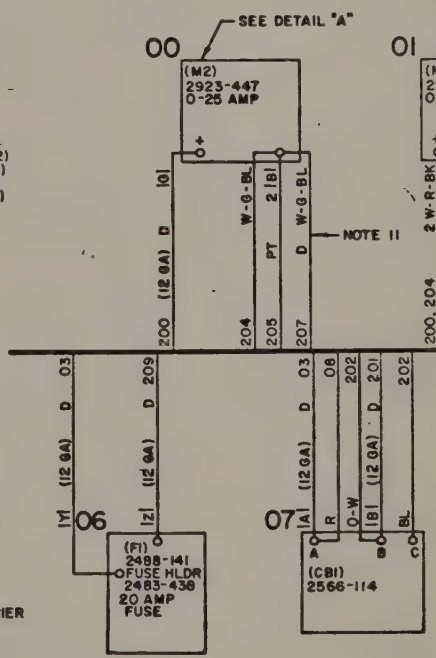

PIGTAIL COMPONENT INFO		
REF DESIG	LPC PART NO.	VALU
C1	2731-106	10
C2	2713-173	1
C6,9,13,14	2724-106	0.1
C12	2737-128	2.2
R4,11	2652-471	390
R6	2615-476	5.6K

MANUFACTURING NOTES:

1. ALL WIRES TO BE 20 GA SOLID UNLESS OTHERWISE SPECIFIED.
2. BI - TERMINAL NEAREST MOUNTING SURFACE.
3. 2 TW - TWO WIRES SHALL BE TWISTED TOGETHER.
4. D - INDICATES LEAD IS A JUMPER.
5. PT - LEADS WHICH ARE PART OF COMPONENTS OR SUBASSEMBLIES.
6. UNLESS OTHERWISE SPECIFIED, RESISTANCE VALUES ARE IN OHMS, CAPACITANCE VALUES ARE IN MICROFARADS.
7. SPLICE CR1 AND CR2 TOGETHER WITH LPC PT NO. 2467-352, PARALLEL SPLICE, LUG END WITH LPC PT NO 2453-097 RING LUG AND SLEEVE WITH LPC PT NO 1675-366 SLEEVING
8. DIODE CR3 TO BE MOUNTED WITH DIODE INSULATING HARDWARE
9. UNDER L1, L2 AND T1 USE (1 EACH) NO. 8 GND WASHER, LPC PT. NO. 2156-405
10. SLEEVE ALL PT COMPONENTS WITH LPC PT. NO. 1675-356 SLEEVING.
11. WIRES SHALL NOT BE CONNECTED UNTIL SHOP TESTS ARE COMPLETED.
12. LUG TOGETHER WITH LPC PT. NO. 2453-664 LUG.
13. WIRES TO BE RUN THROUGH T2 AS SHOWN IN DETAIL "B"; SECURE T2 TO WIRES WITH TYRAP
14. REMOVE LUGS FROM T2 FOR SOLDERING TO J1

REVISIONS

REV NO.	CHGS BY / DWG NO.	DATE	DESCRIPTION
2	1835633 10 6 75		REDRAWN; POLARITY OPTION REVISED, METERS CHANGED
3	1835779 12 3 75		T2 AND R8 ADDED NOTES 13 AND 14 AND DETAIL "B" ADDED
4	1835984 4 15 76		A2 WAS 4337-640, P2 AND J2 ADDED, J1, J3, J4 WERE 2475-776
5	1836092 5 18 76		R11 ADDED
			SOLDER LUGS 2451-243 REMOVED. 4257-022 WAS 4357-022. 2453-073 ADDED
ISS. NO. 6	1835938	J.H.	8-30-76
			POL KEY WAS 2478-527
ISS. 7	1836326	S.K.	10-19-76
			A5 WAS 2821-813 AT LOC 210
ISS. 8	1836438	J.R.	5-10-77
9	183-7001	4-20-79	S.M.G. REMOVED W-O-G FROM LOC 00, SH. 1 TO LOC 04, SH. 2; REMOVED R7 FROM LOC 04, SH. 2.

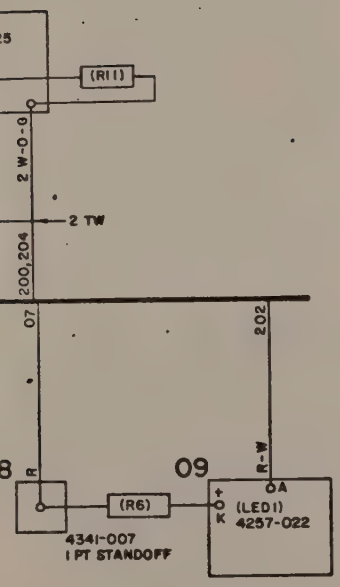

ENGINEERING NOTES:

51. OUTPUT POLARITY ADJUSTMENT

TB2 TERMINAL STRIP		
WIRE	POSITIVE OUTPUT	NEGATIVE OUTPUT
JUMPERS	5-9, 6-8, 7-10	5-7, 6-10, 8-9

UNLESS OTHERWISE SPECIFIED THE OUTPUT WILL BE CONNECTED FOR POSITIVE OUTPUT.

DETAIL "A"

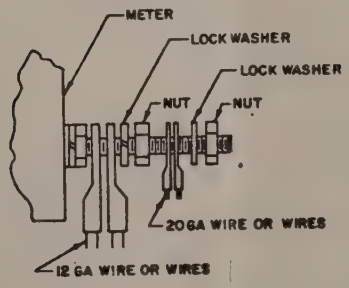

ATION	
	LOC
	03
	03
	03
	03
	04,01
	08,09

DETAIL "B"

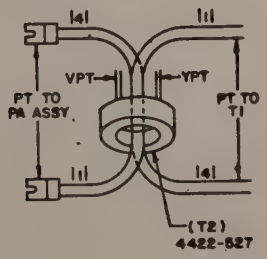

WIRING DIAGRAM FOR MODEL HSB16B

DESIGN	R. LANGWORTHY
DWG. NO.	9
DRAWN BY	DATE
CHECKED BY	G SOBOTKA DATE 8-28-75
CHECKED BY	N KAMMILLER DATE 8-28-75
APPROVED BY	J MITCHELL DATE 9-8-75
RATING	STANDARD
	T-5653-028
SHEET	1 OF 2

LORAIN PRODUCTS CORPORATION
LORAIN, OHIO
LORAIN PRODUCTS (CANADA) LTD., ST. THOMAS, ONTARIO

DWG SIZE D

PRINTED IN U.S.A.

FIG. 3
BASE

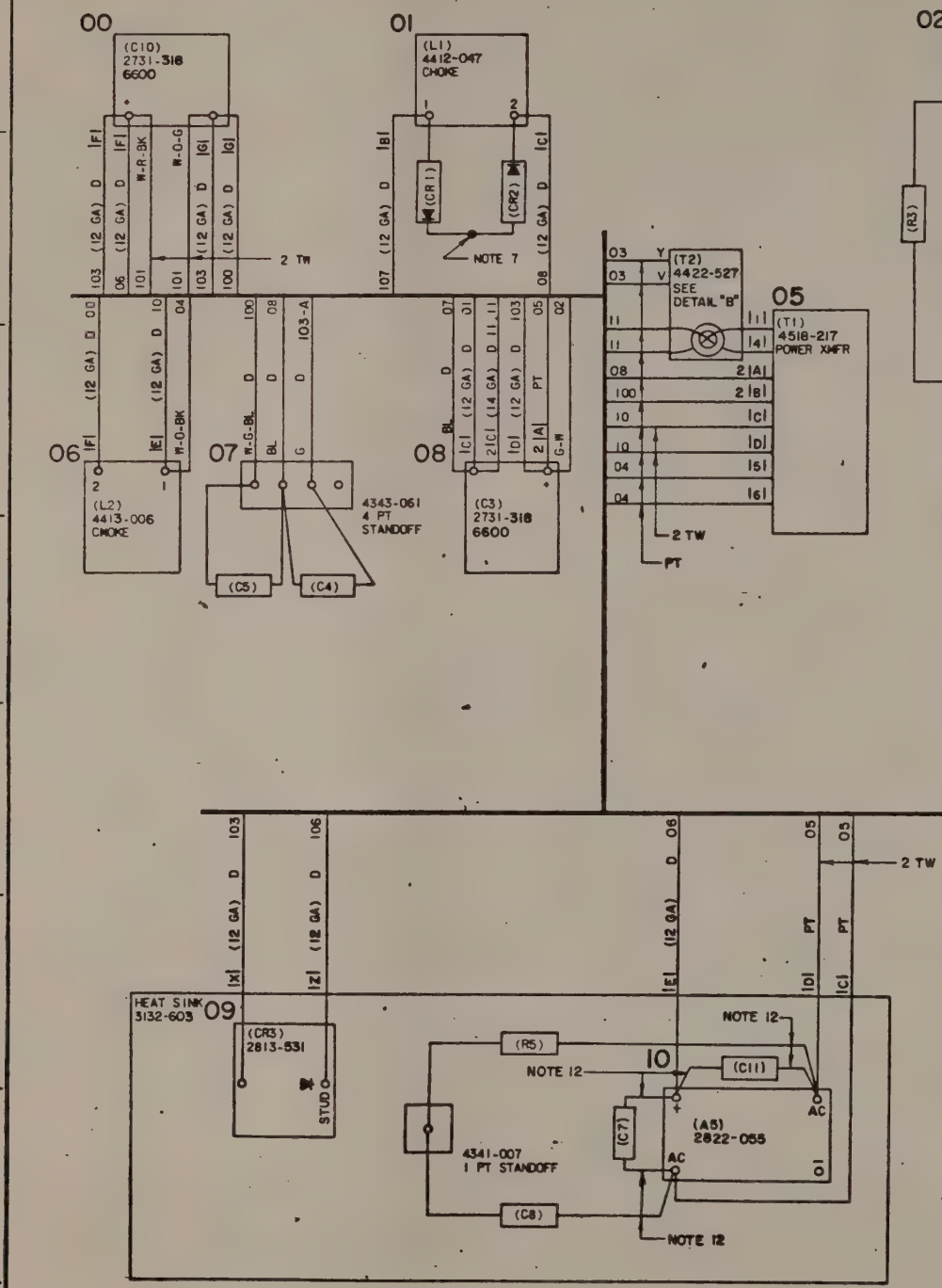

PIGTAIL COMPONENT	
REF DESIG	LPC PART NO.
C4-5	2724-140
C7	2724-146
C8	2724-140
C11	2724-146
CR1-2	2812-223
R1	2635-682
R2	2615-335
R3	2635-721
R5	2651-473
R8	2636-817

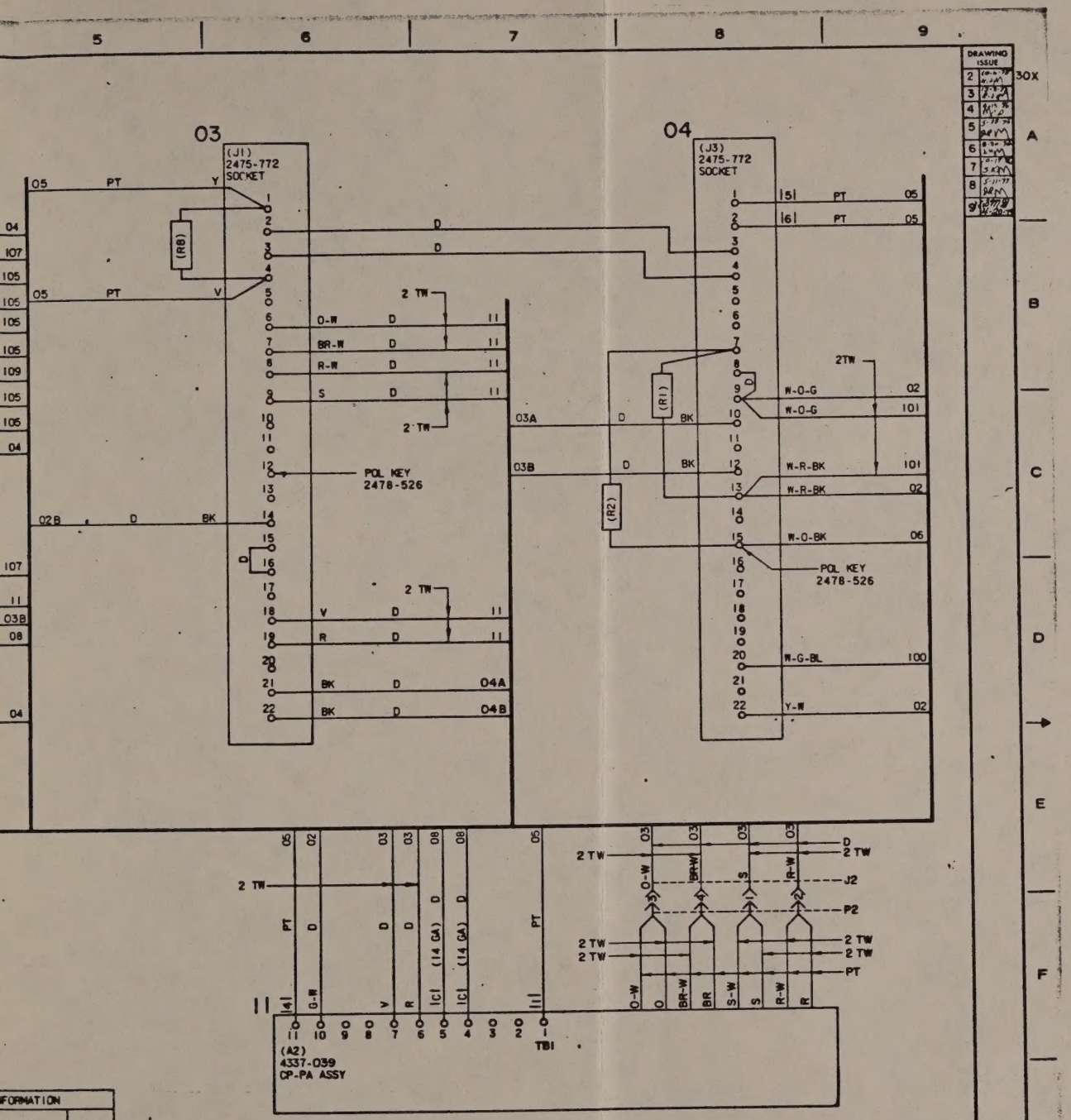

FORMATION	
VALUE	LOC
0.01	07
680 PF	10
0.01	10
680 PF	10
	01
16.2K	04
1 MEGO	04
121K	02
10	10
22.1	05

ISSUE 9

MODEL HSB16B

T-5653-028

LORAIN PRODUCTS CORPORATION

DWG SIZE D

SHEET 2

PRINTED IN U.S.A.

Document Title: Product Manuals	Document Number: ESC-0906-92-01
Revision Number: A X B_ C_ D_ E_	Page: N/A
Prepared By: Rick Schultz	Approved By: [illegible]
Issued By: Jim Steinau	Issue Date: 10/19/93

CHANGE NOTICE SUMMARY

Revision	Reason for Change	Date of Change

85548